Concealed single-lever mixer with diverter - Chrome

TARA

36 120 660 Product version from 2/20/2020

- automatic diverter
- cover plate Ø 150 mm
- WRAS

Fits: TARA, META

Chrome	36 120 660-00
Brushed Platinum	36 120 660-06
Platinum	36 120 660-08
Dark Chrome	36 120 660-19
Light Gold	36 120 660-26
Brushed Light Gold	36 120 660-27
Brushed Durabrass (23kt Gold)	36 120 660-28
Matte Black	36 120 660-33
Brushed Bronze	36 120 660-42
Brushed Champagne (22kt Gold)	36 120 660-46
Champagne (22kt Gold)	36 120 660-47
Brushed Chrome	36 120 660-93
Brushed Dark Platinum	36 120 660-99

Required miscellaneous

Concealed single-lever mixer with backflow preventor - 35 021 970 90
- max. recess depth mm
- min. recess depth mm

Required miscellaneous

Concealed single-lever mixer - 35 020 970 90
- max. recess depth mm
- min. recess depth mm

Recommended miscellaneous

xGRID Attachment set for integrating in the dry wall construction - 12 340 970 90

Required miscellaneous

xGRID Installation track 555 mm - 12 360 970 90

Concealed single-lever mixer with diverter - Chrome

TARA

36 120 660 Product version from 2/20/2020

mm [inches]

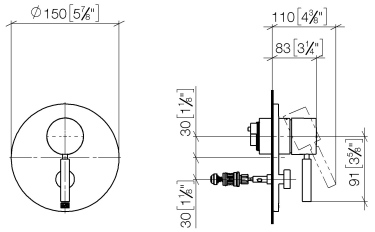

Flow rate chart

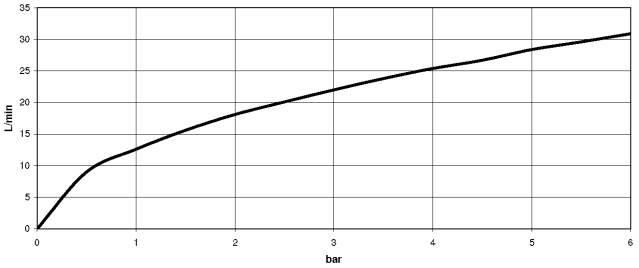

Codes & Standards

DIN 4109	EN 817	ISO 3822	Scottish Water Byelaws
UK Water Supply Regulations	Ü-Zeichen		

Certificates

DVGW_DW-6512DN0	LGA_19	WRAS_2207

Concealed single-lever mixer with diverter - Chrome

TARA

36 120 660 Product version from 2/20/2020

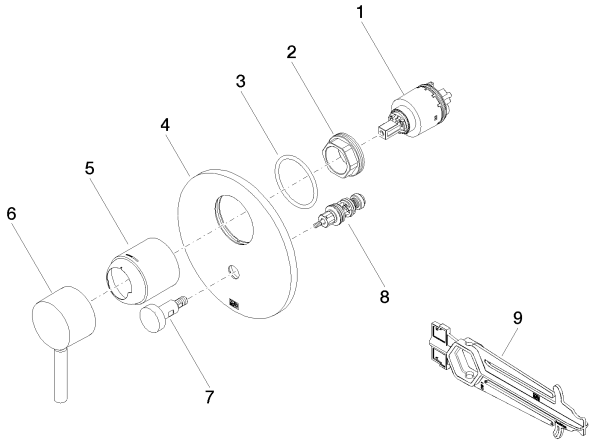

Spare parts list

No.	Item Number	Name	Quantity used	Delivery time
1	90 15 05 039 00 90	cartridge	1	2
2	09 24 04 448 90	nut	1	2
3	09 14 10 084 90	seal	1	2
4	09 11 02 261-00	plate	1	10
5	09 11 02 260-00	sleeve	1	10
6	90 20 66 004 00-00	handle	1	10
7	90 31 09 139 00-00	pull-rod	1	10
8	90 21 34 081 00 90	diverter	1	2
9	90 30 09 064 00 90	key	1	2

We reserve the right to change designs, product range and technical specifications without prior notice.
More information can be found at: www.dornbracht.com +49 (0) 2371 8899 900 mail@dornbracht.com